BOSS BF-2009-16

AU: 1300 502 677 | NZ: 0800 502 677 www.bossfire.com

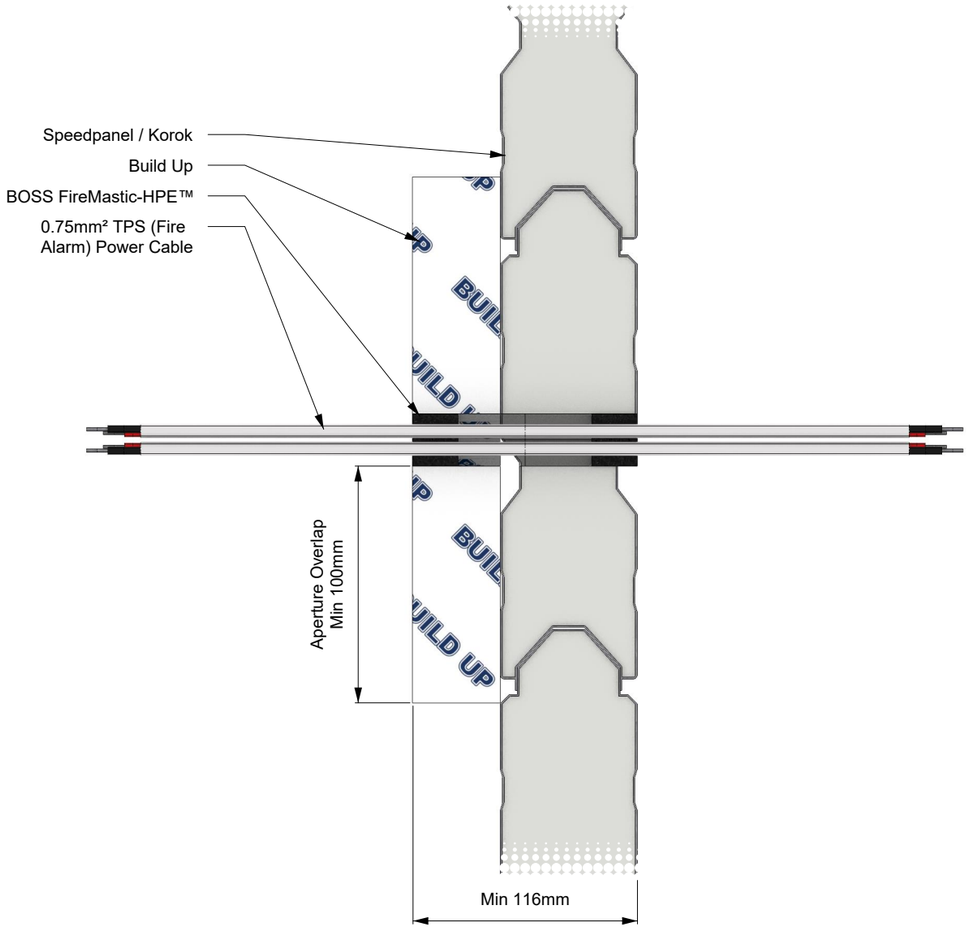

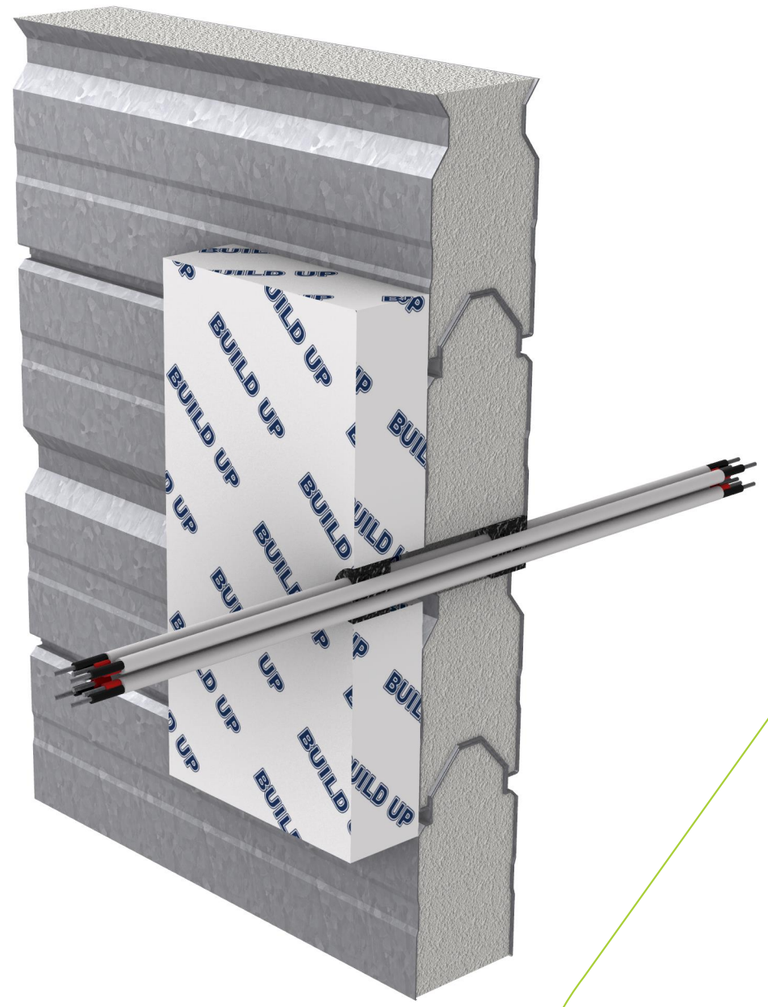

BUILD UP DETAILS

*Localised thickening to be fixed and sealed to substrate using appropriate methods relevant to the substrate and build up material.

*To achieve the necessary thickness and FRL rating of the originally tested substrate, the separating element can be built-up on one or both sides by using BOSS Batts, fire-rated plasterboard, calcium silicate board, or Shaftliner board.

SYSTEM DESCRIPTION

Orientation:	Wall
Trade / Type:	Electrical
Service:	Fire Alarm
Substrate:	Speedpanel / Korok with Buildup
Min Substrate Thickness (mm):	116
Sealant Depth (mm):	26
Sealant Fillet (mm):	0
Wrap Length (mm):	-
FRL / FRR:	-/120/120

FIRE STOPPING INFORMATION

BOSS FireMastic-HPE™	-
-	-
-	-
APERTURE (mm)	**ANNULAR GAP (mm)**
30	-

ADDITIONAL INFORMATION

SERVICE SIZE & DETAILS

Up to 4 x 0.75 mm² TPS (Fire Alarm) Power Cables. Sealant to depth of plasterboard in annular gap finished flush.

SUPPORTING INFORMATION

Reference Standard:	AS 1530.4:2014		
Supplementary Standard:	AS 4072.1-2005		
Report Reference:	WF FAS 190335		
Drawing Number:	BF-2009.16		
Date:	26/11/24	**Rev:**	01

IMPORTANT: This drawing is provided as a guide only and does not guarentee compliance for every application. Confirm that the supporting certification is applicable to your specific construction details and obtain acceptance from the relevant Certifying Authority before installation. BOSS Passive Fire reserves the right to amend this document without notice.