BOSS BF-2055-26

AU: 1300 502 677 | NZ: 0800 502 677 www.bossfire.com

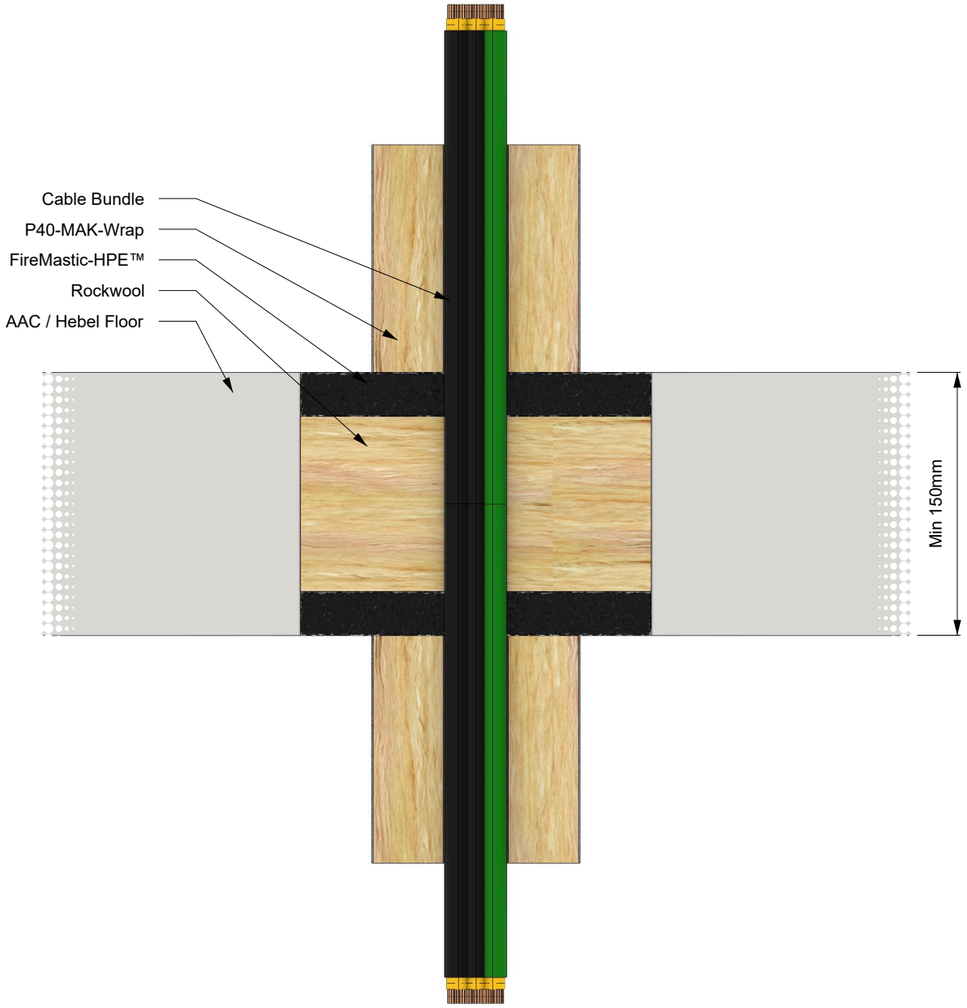

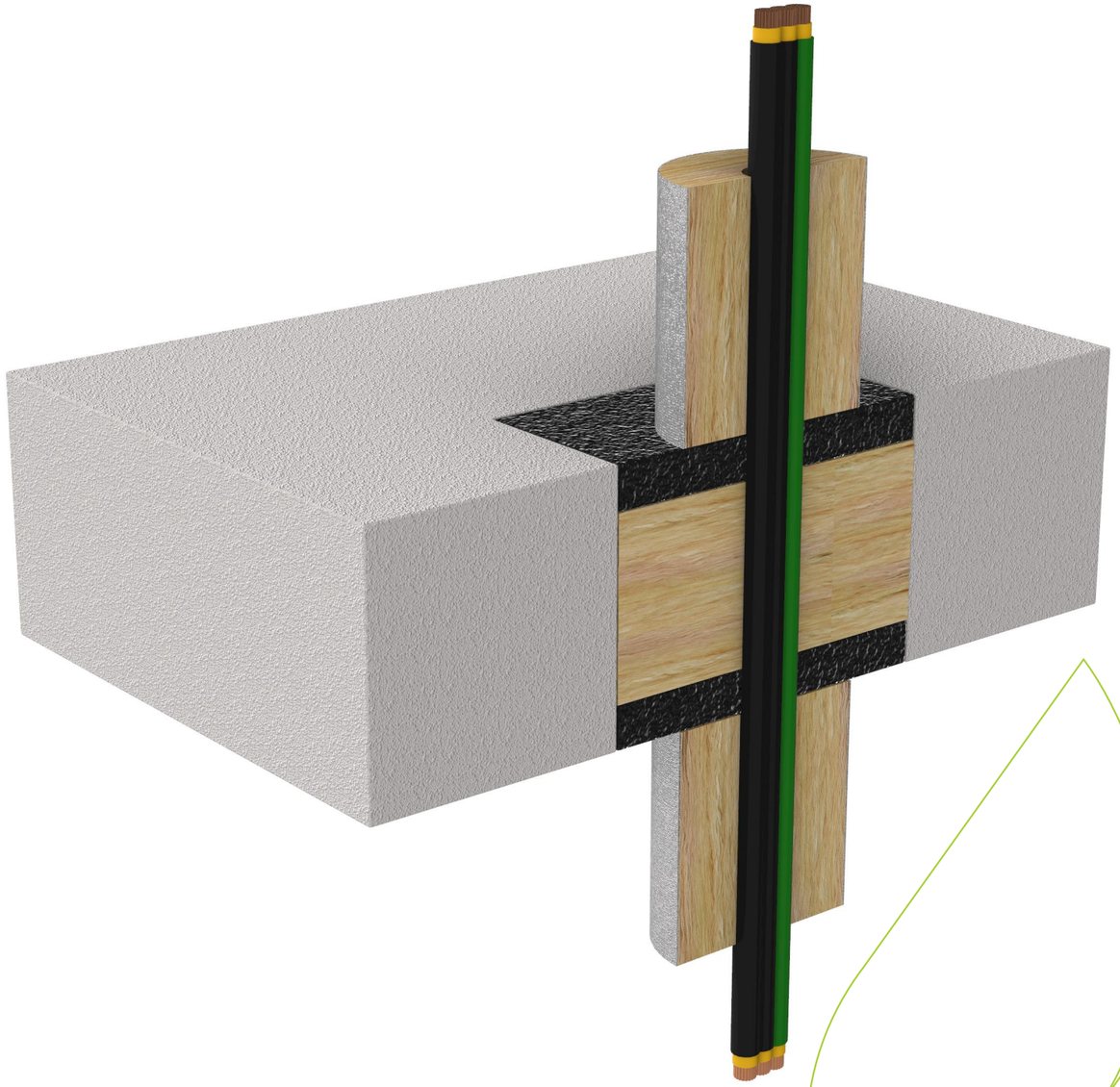

SYSTEM DESCRIPTION	
Orientation:	Floor
Trade / Type:	Electrical
Service:	Multi Core / Orange Circular / Mains
Substrate:	AAC / Hebel Floor
Min Substrate Thickness (mm):	150
Sealant Depth (mm):	25
Sealant Fillet (mm):	0
Wrap Length (mm):	600
FRL / FRR:	-/180/120

FIRE STOPPING INFORMATION	
BOSS FireMastic-HPE™	-
BOSS P40-MAK Wrap™	-
-	-
APERTURE (mm)	**ANNULAR GAP (mm)**
200 x 200	-
ADDITIONAL INFORMATION	
-	

SERVICE SIZE & DETAILS

•1 × (G1) non-sheathed (wire) (PVC/-) 1 × 95 mm2,
•1 × (G2) non-sheathed (wire) (PVC/-) 1 × 185 mm2,
Sealant 25 mm deep in annular gap finished flush on both sides. The system also includes a 100 mm deep infill friction fitted stone wool insulation, centrally located in the annular gap through the floor system.
P40 MAK Wrap to be installed 600 mm on both sides.

SUPPORTING INFORMATION			
Reference Standard:	AS 1530.4:2014		
Supplementary Standard:	AS 4072.1-2005		
Report Reference:	WF FAS 190335		
Drawing Number:	BF-2055.26		
Date:	12/12/24	**Rev:**	01

IMPORTANT: This drawing is provided as a guide only and does not guarentee compliance for every application. Confirm that the supporting certification is applicable to your specific construction details and obtain acceptance from the relevant Certifying Authority before installation. BOSS Passive Fire reserves the right to amend this document without notice.