BOSS BF-2065-16

AU: 1300 502 677 | NZ: 0800 502 677 www.bossfire.com

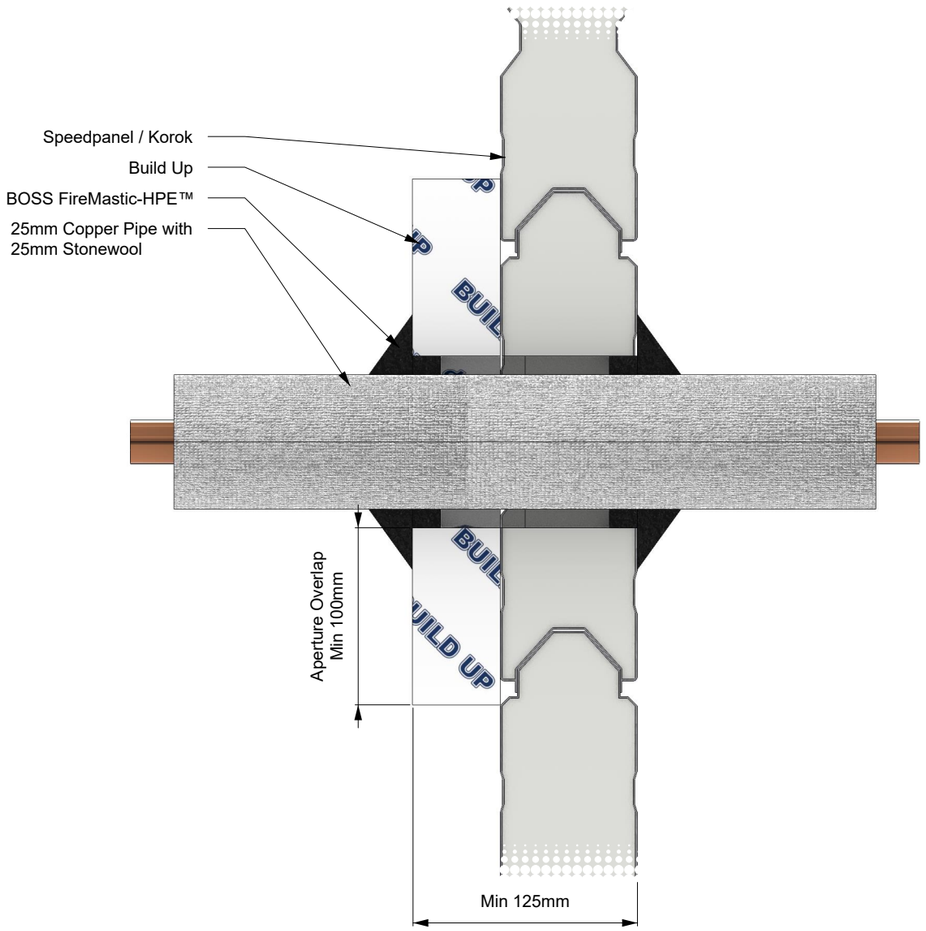

*Localised thickening to be fixed and sealed to substrate using appropriate methods relevant to the substrate and build up material.

*To achieve the necessary thickness and FRL rating of the originally tested substrate, the separating element can be built-up on one or both sides by using BOSS Batts, fire-rated plasterboard, calcium silicate board, or Shaftliner board.

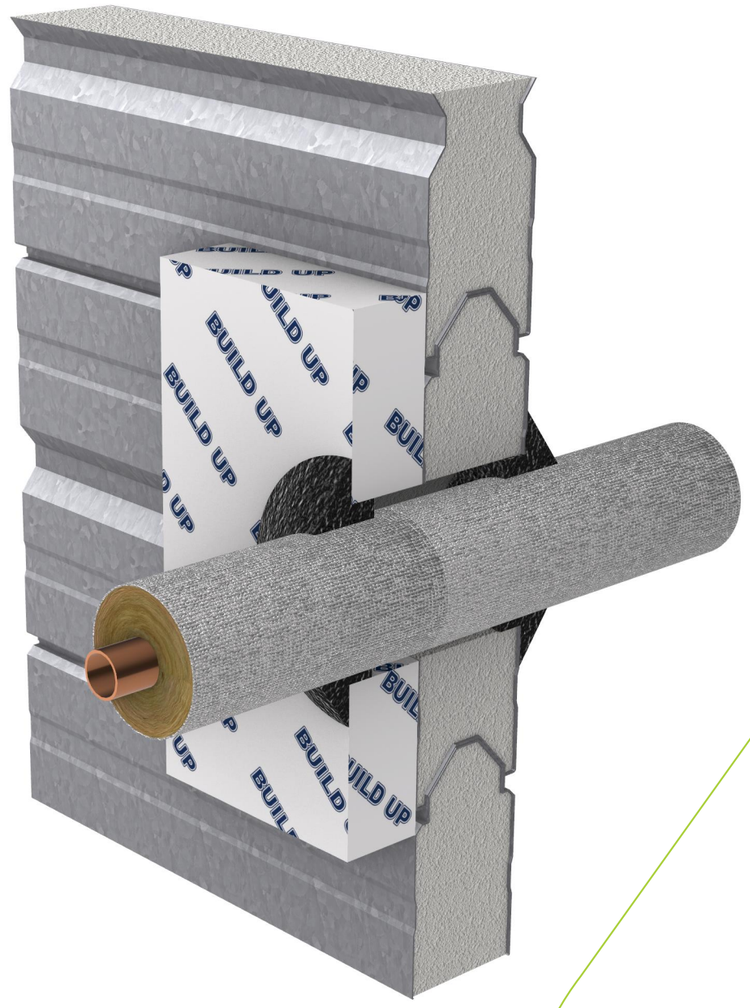

SYSTEM DESCRIPTION

Orientation:	Wall
Trade / Type:	Plumbing / Hydraulic / Active Fire
Service:	Insulated Copper Pipes
Substrate:	Speedpanel / Korok with Buildup
Min Substrate Thickness (mm):	125
Sealant Depth (mm):	16
Sealant Fillet (mm):	35
Wrap Length (mm):	400
FRL / FRR:	-/120/120

FIRE STOPPING INFORMATION

BOSS FireMastic-HPE™	-
Stonewool insulation	-
-	-
APERTURE (mm)	**ANNULAR GAP (mm)**
98	-

ADDITIONAL INFORMATION

-

SERVICE SIZE & DETAILS

Up to 25 mm copper pipe with 25 mm thick stonewool insulation. Insulation wrapping is extended 400 mm on both sides. Sealant 16mm deep in annular gap and finished with a 35 mm x 35 mm fillet both sides.

SUPPORTING INFORMATION

Reference Standard:	AS 1530.4:2014		
Supplementary Standard:	AS 4072.1-2005		
Report Reference:	WF FAS 190335		
Drawing Number:	BF-2065.16		
Date:	12/12/24	**Rev:**	01

IMPORTANT: This drawing is provided as a guide only and does not guarentee compliance for every application. Confirm that the supporting certification is applicable to your specific construction details and obtain acceptance from the relevant Certifying Authority before installation. BOSS Passive Fire reserves the right to amend this document without notice.