BOSS BF-2069-14

AU: 1300 502 677 | NZ: 0800 502 677 www.bossfire.com

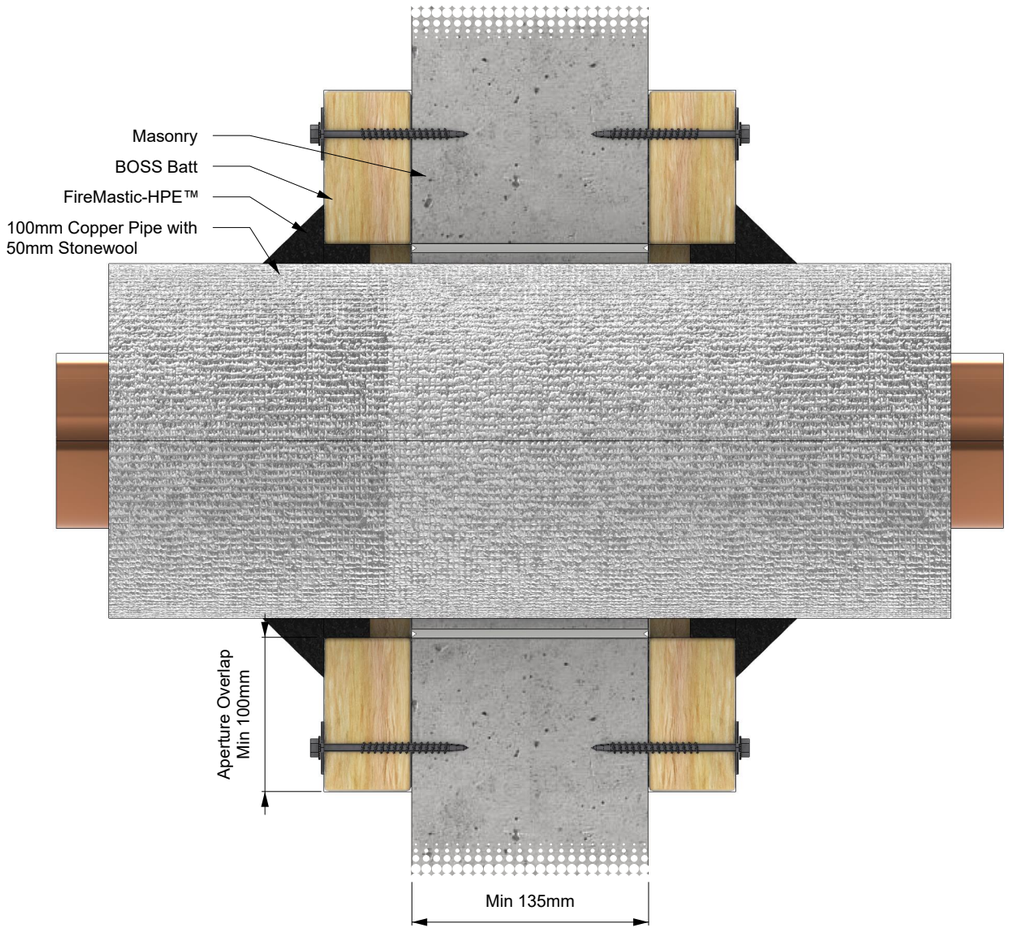

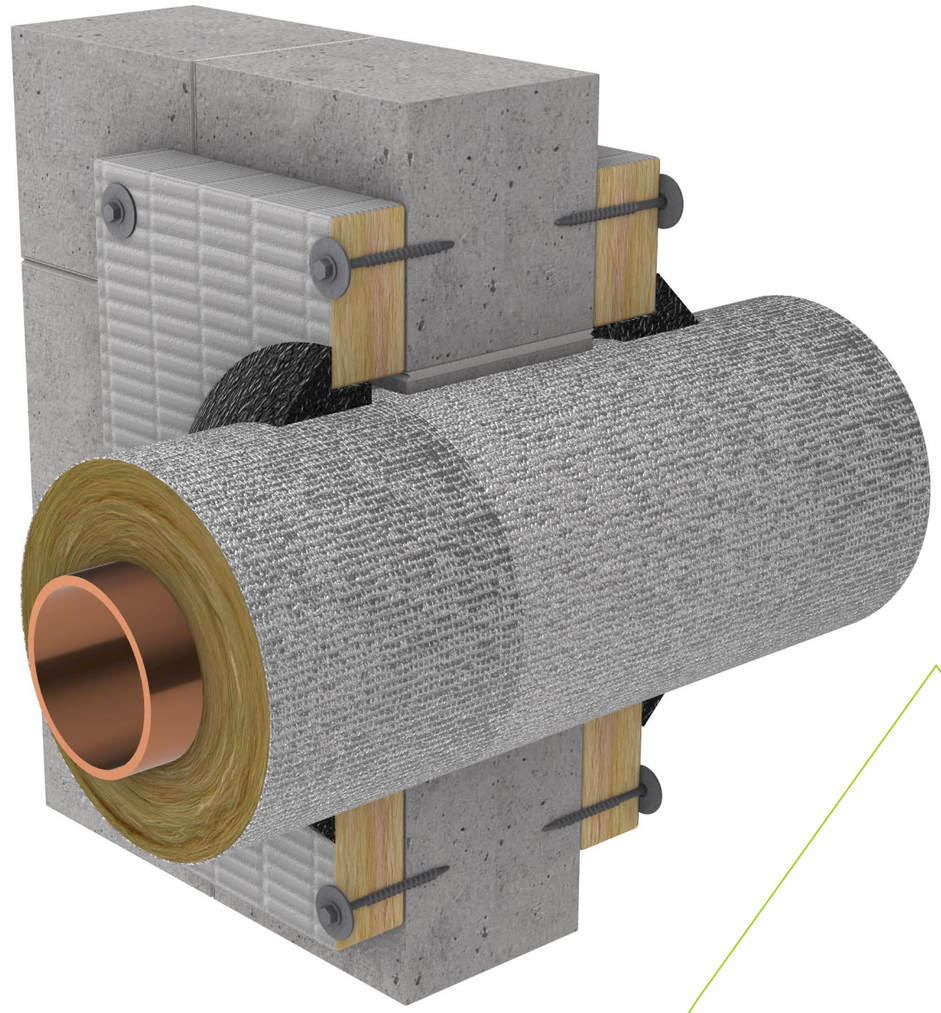

SYSTEM DESCRIPTION	
Orientation:	Wall
Trade / Type:	Plumbing / Hydraulic / Active Fire
Service:	Insulated Copper Pipes
Substrate:	2 layers BOSS Batt - Pattress fitted either side
Min Substrate Thickness (mm):	135
Sealant Depth (mm):	16
Sealant Fillet (mm):	35
Wrap Length (mm):	600
FRL / FRR:	-/120/120

FIRE STOPPING INFORMATION	
BOSS FireMastic-HPE™	-
Stonewool insulation	-
-	-
APERTURE (mm)	**ANNULAR GAP (mm)**
224	-
ADDITIONAL INFORMATION	
-	

SERVICE SIZE & DETAILS
Up to 100 mm copper pipe with 50 mm thick stonewool insulation. Insulation wrapping is extended 600 mm on both sides. Sealant 26 mm deep in annular gap and finished with 35 mm x 35 mm fillet on both sides.

SUPPORTING INFORMATION			
Reference Standard:	AS 1530.4:2014		
Supplementary Standard:	AS 4072.1-2005		
Report Reference:	WF FAS 190335		
Drawing Number:	BF-2069.14		
Date:	12/12/24	**Rev:**	01

IMPORTANT: This drawing is provided as a guide only and does not guarentee compliance for every application. Confirm that the supporting certification is applicable to your specific construction details and obtain acceptance from the relevant Certifying Authority before installation. BOSS Passive Fire reserves the right to amend this document without notice.