BOSS BF-2071-13

AU: 1300 502 677 | NZ: 0800 502 677 www.bossfire.com

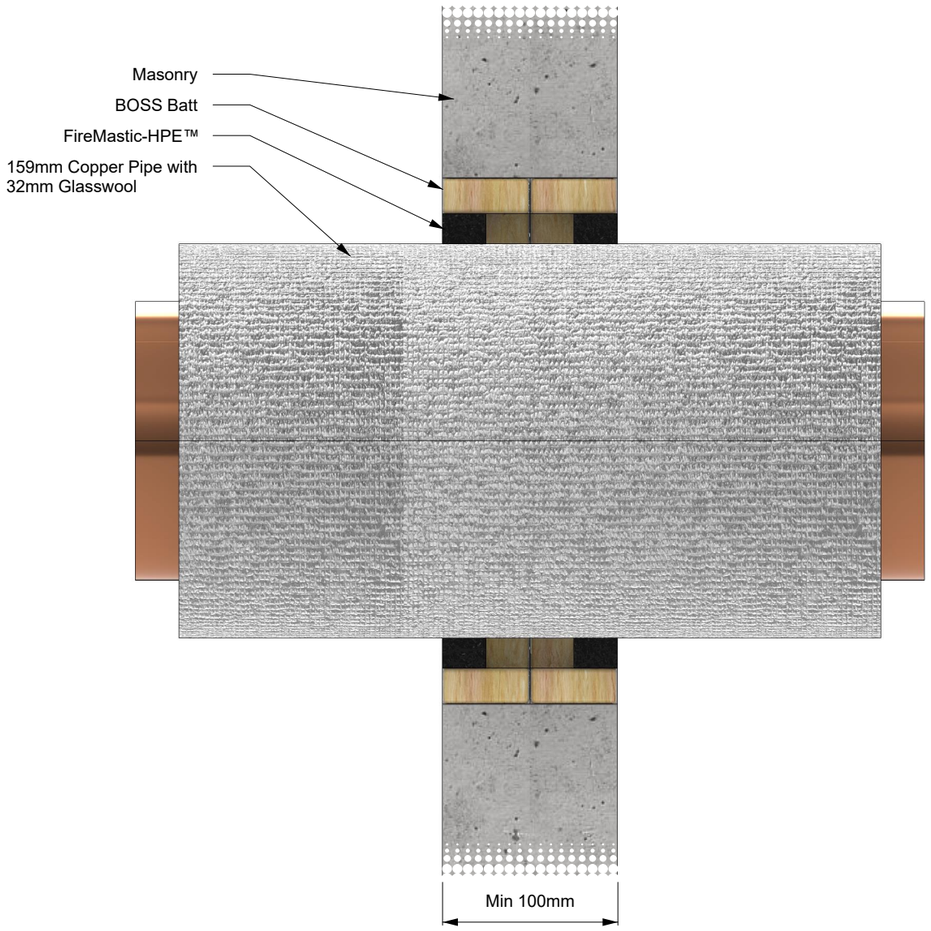

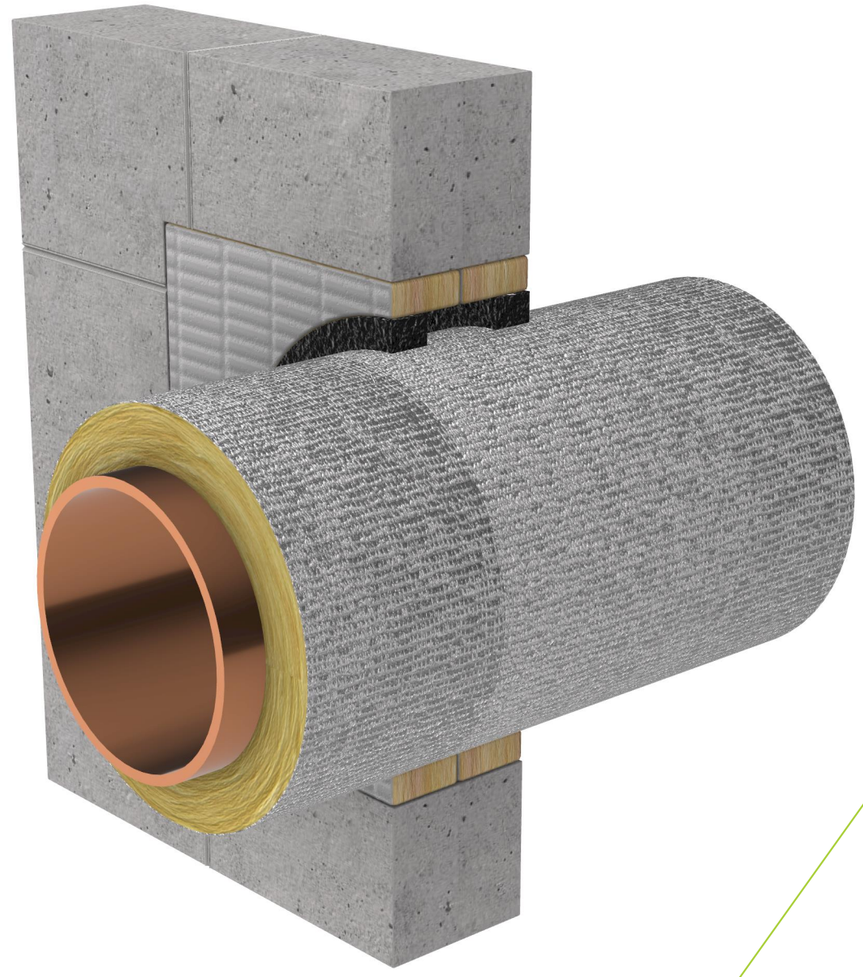

SYSTEM DESCRIPTION

Orientation:	Wall
Trade / Type:	Plumbing / Hydraulic / Active Fire
Service:	Insulated Copper Pipes
Substrate:	2 layers BOSS Batt - Friction fitted
Min Substrate Thickness (mm):	100
Sealant Depth (mm):	25
Sealant Fillet (mm):	0
Wrap Length (mm):	1000
FRL / FRR:	-/120/120

FIRE STOPPING INFORMATION

BOSS FireMastic-HPE™	-
Glasswool insulation	-
-	-
APERTURE (mm)	**ANNULAR GAP (mm)**
259	-

ADDITIONAL INFORMATION

-

SERVICE SIZE & DETAILS

Up to 159 mm copper pipe with 32 mm thick glasswool insulation. Insulation wrapping is extended 1000 mm on both sides. Sealant 25 mm deep in annular gap and finished flush on both sides.

SUPPORTING INFORMATION

Reference Standard:	AS 1530.4:2014		
Supplementary Standard:	AS 4072.1-2005		
Report Reference:	WF FAS 190335		
Drawing Number:	BF-2071.13		
Date:	12/12/24	**Rev:**	01

IMPORTANT: This drawing is provided as a guide only and does not guarentee compliance for every application. Confirm that the supporting certification is applicable to your specific construction details and obtain acceptance from the relevant Certifying Authority before installation. BOSS Passive Fire reserves the right to amend this document without notice.