BOSS BF-2081-7

AU: 1300 502 677 | NZ: 0800 502 677 www.bossfire.com

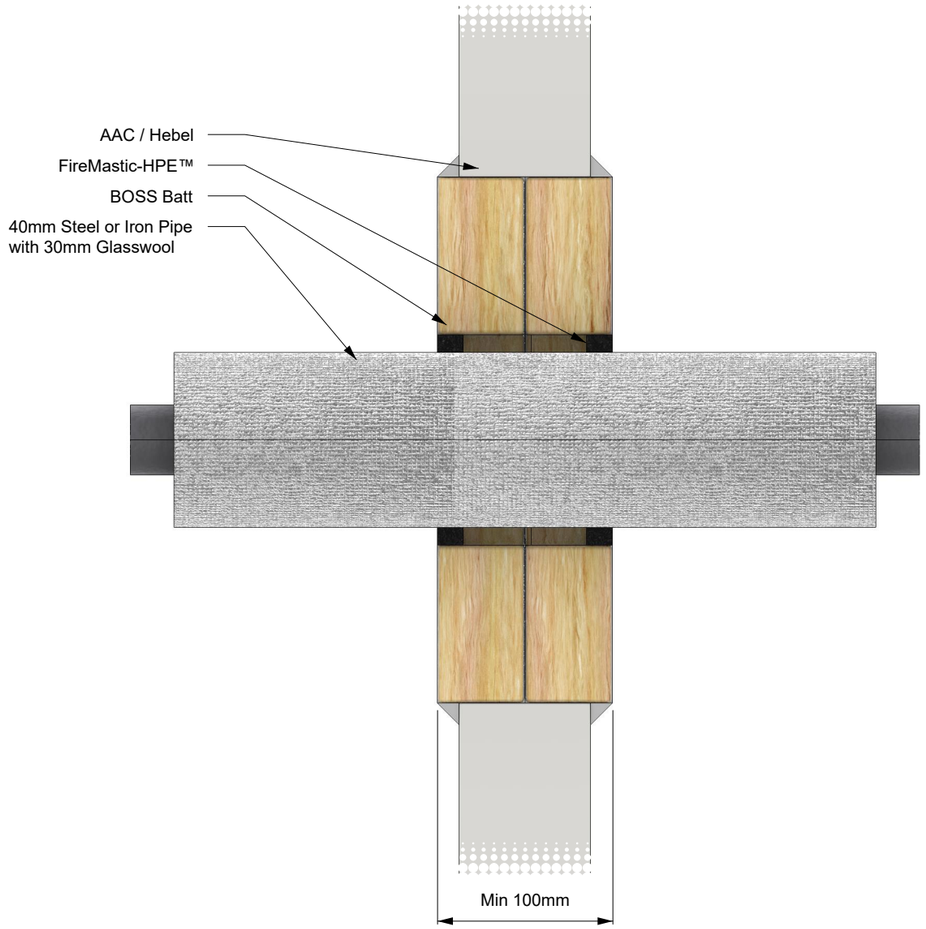

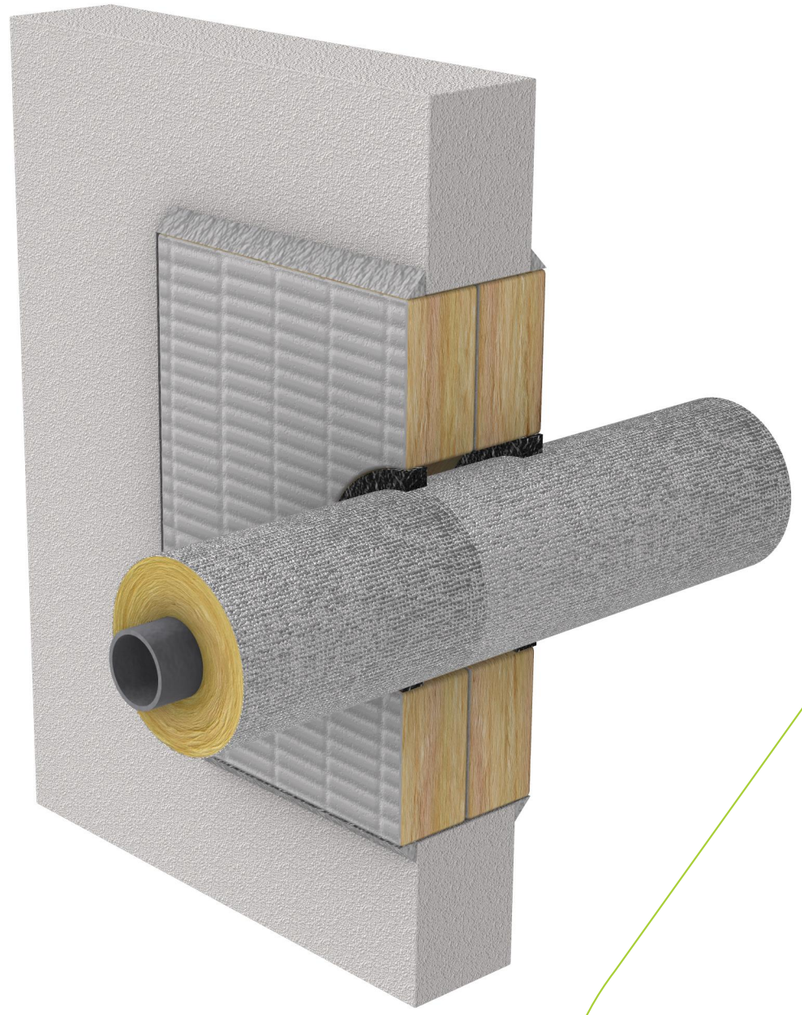

SYSTEM DESCRIPTION	
Orientation:	Wall
Trade / Type:	Plumbing / Hydraulic / Active Fire
Service:	Insulated Steel Pipes
Substrate:	AAC / Hebel
Min Substrate Thickness (mm):	100
Sealant Depth (mm):	15
Sealant Fillet (mm):	0
Wrap Length (mm):	600
FRL / FRR:	-/60/60

FIRE STOPPING INFORMATION	
BOSS FireMastic-HPE™	-
Glasswool insulation	-
-	-
APERTURE (mm)	**ANNULAR GAP (mm)**
115	7.5
ADDITIONAL INFORMATION	
-	

SERVICE SIZE & DETAILS

Up to 40 mm steel or iron pipe with 30 mm thick foil faced glass wool insulation, installed through 100 mm thick double layer of BossBatt in maximum aperture 600 mm x 600 mm. Insulation wrapping is extended 600 mm on both sides. Sealant 15 mm deep in annular gap and finished flush on both sides.

SUPPORTING INFORMATION			
Reference Standard:	AS 1530.4:2014		
Supplementary Standard:	AS 4072.1-2005		
Report Reference:	WF FAS 190335		
Drawing Number:	BF-2081.7		
Date:	20/12/24	**Rev:**	01

IMPORTANT: This drawing is provided as a guide only and does not guarentee compliance for every application. Confirm that the supporting certification is applicable to your specific construction details and obtain acceptance from the relevant Certifying Authority before installation. BOSS Passive Fire reserves the right to amend this document without notice.