# BOSS BF-2192-4

AU: 1300 502 677 | NZ: 0800 502 677 www.bossfire.com

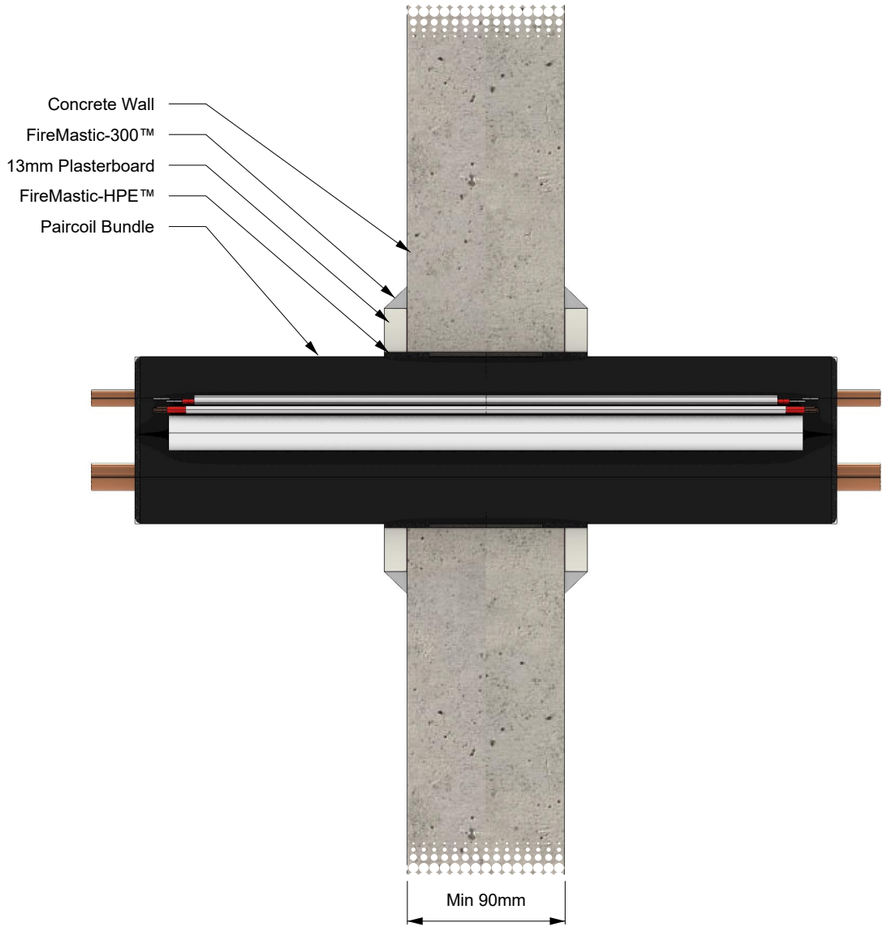


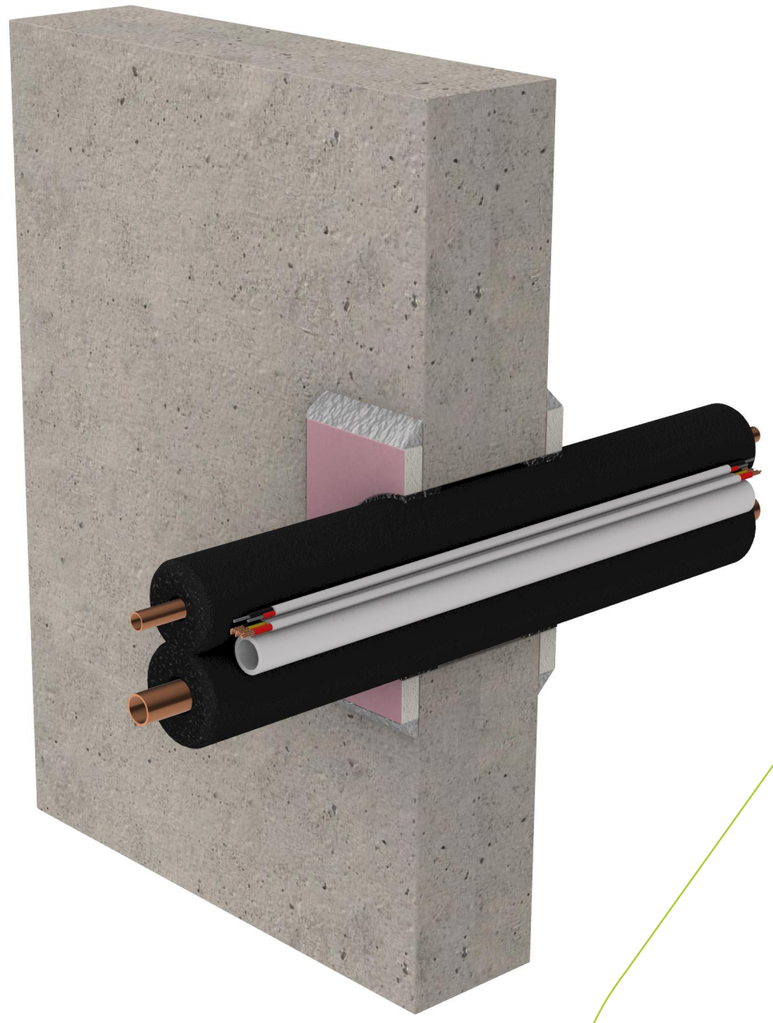

## SYSTEM DESCRIPTION

| | |
|---|---|
| **Orientation:** | Wall |
| **Trade / Type:** | HVAC |
| **Service:** | - |
| **Substrate:** | Concrete wall |
| **Min Substrate Thickness (mm):** | 90 |
| **Sealant Depth (mm):** | 26 |
| **Sealant Fillet (mm):** | 0 |
| **Wrap Length (mm):** | - |
| **FRL / FRR:** | -/60/60 |

## FIRE STOPPING INFORMATION

| | |
|---|---|
| BOSS FireMastic-HPE™ | - |
| BOSS FireMastic-300™ | - |
| - | - |
| **APERTURE (mm)** | **ANNULAR GAP (mm)** |
| 80 | - |

## ADDITIONAL INFORMATION

-

## SERVICE SIZE & DETAILS

- Paircoil - Up to 10 mm/15 mm insulated copper pipes with non-rated lagging,
- Up to 2.5 mm² 2C+E TPS Power Cable,
- Up to 1.5 mm² 2 Core Data Cable.
- Up to 20 mm uPVC outlet pipe

13 mm plasterboard patch (patress) 150 mm x 150 mm placed over the penetration on both sides, fixed to the wall. The edges of the plasterboard build up coated with a 13 mm x 13 mm fillet of FM300. HPE sealant in the annular gap 26 mm deep finished flush with the wall.

## SUPPORTING INFORMATION

| | | | |
|---|---|---|---|
| **Reference Standard:** | AS 1530.4:2014 | | |
| **Supplementary Standard:** | AS 4072.1-2005 | | |
| **Report Reference:** | WF FAS 190335 | | |
| **Drawing Number:** | BF-2192.4 | | |
| **Date:** | 20/01/25 | **Rev:** | 01 |

**IMPORTANT:** This drawing is provided as a guide only and does not guarentee compliance for every application. Confirm that the supporting certification is applicable to your specific construction details and obtain acceptance from the relevant Certifying Authority before installation. BOSS Passive Fire reserves the right to amend this document without notice.