BOSS BF-2198-17

AU: 1300 502 677 | NZ: 0800 502 677 www.bossfire.com

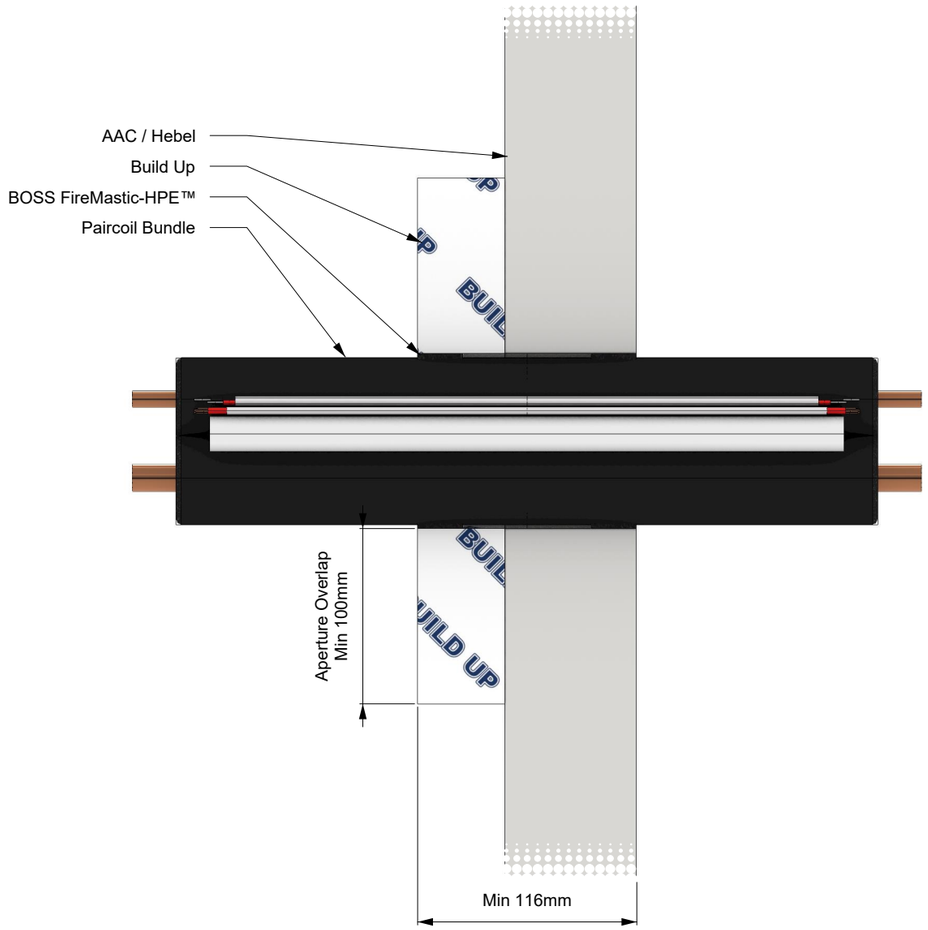

BUILD UP DETAILS

*Localised thickening to be fixed and sealed to substrate using appropriate methods relevant to the substrate and build up material.

*To achieve the necessary thickness and FRL rating of the originally tested substrate, the separating element can be built-up on one or both sides by using BOSS Batts, fire-rated plasterboard, calcium silicate board, or Shaftliner board.

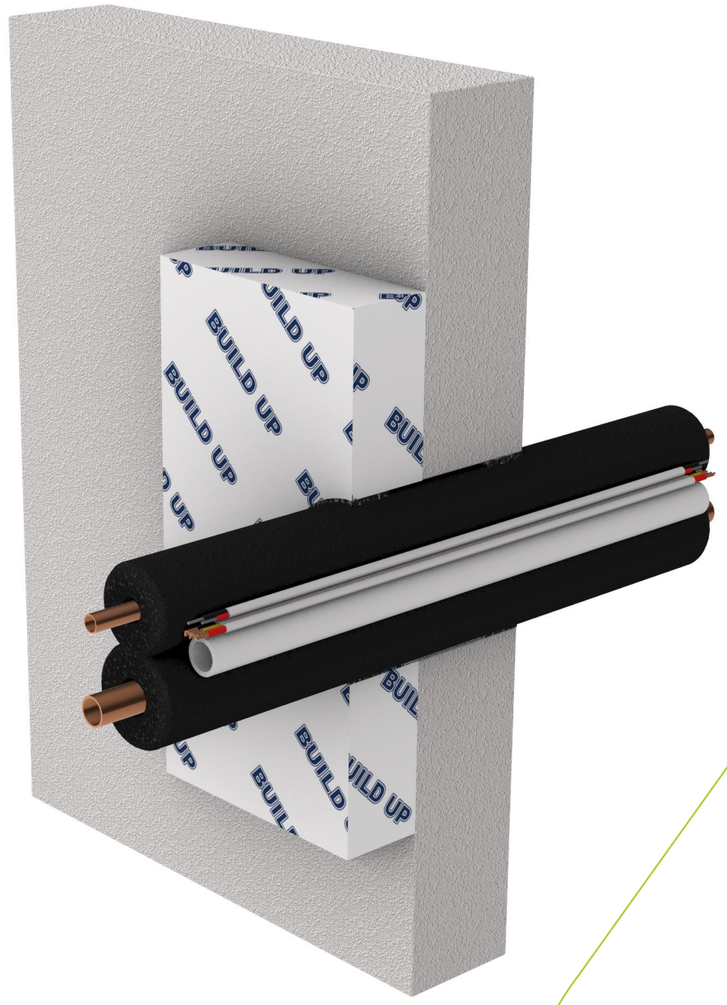

SYSTEM DESCRIPTION

Orientation:	Wall
Trade / Type:	HVAC
Service:	-
Substrate:	AAC / Hebel with Buildup
Min Substrate Thickness (mm):	116
Sealant Depth (mm):	26
Sealant Fillet (mm):	0
Wrap Length (mm):	-
FRL / FRR:	-/60/60

FIRE STOPPING INFORMATION

BOSS FireMastic-HPE™	-
-	-
-	-
APERTURE (mm)	**ANNULAR GAP (mm)**
80	-

ADDITIONAL INFORMATION

-

SERVICE SIZE & DETAILS

- Paircoil - Up to 10 mm/15 mm Insulated Copper Pipes with non-rated lagging,
- Up to 2.5 mm² 2C+E TPS Power Cable,
- Up to 1.5 mm² 2 Core Data Cable.
- Up to 20 mm uPVC conduit outlet pipe.

Sealant to a depth of 26 mm in annular gap finished flush both sides.

SUPPORTING INFORMATION

Reference Standard:	AS 1530.4:2014		
Supplementary Standard:	AS 4072.1-2005		
Report Reference:	WF FAS 190335		
Drawing Number:	BF-2198.17		
Date:	20/01/25	**Rev:**	01

IMPORTANT: This drawing is provided as a guide only and does not guarentee compliance for every application. Confirm that the supporting certification is applicable to your specific construction details and obtain acceptance from the relevant Certifying Authority before installation. BOSS Passive Fire reserves the right to amend this document without notice.