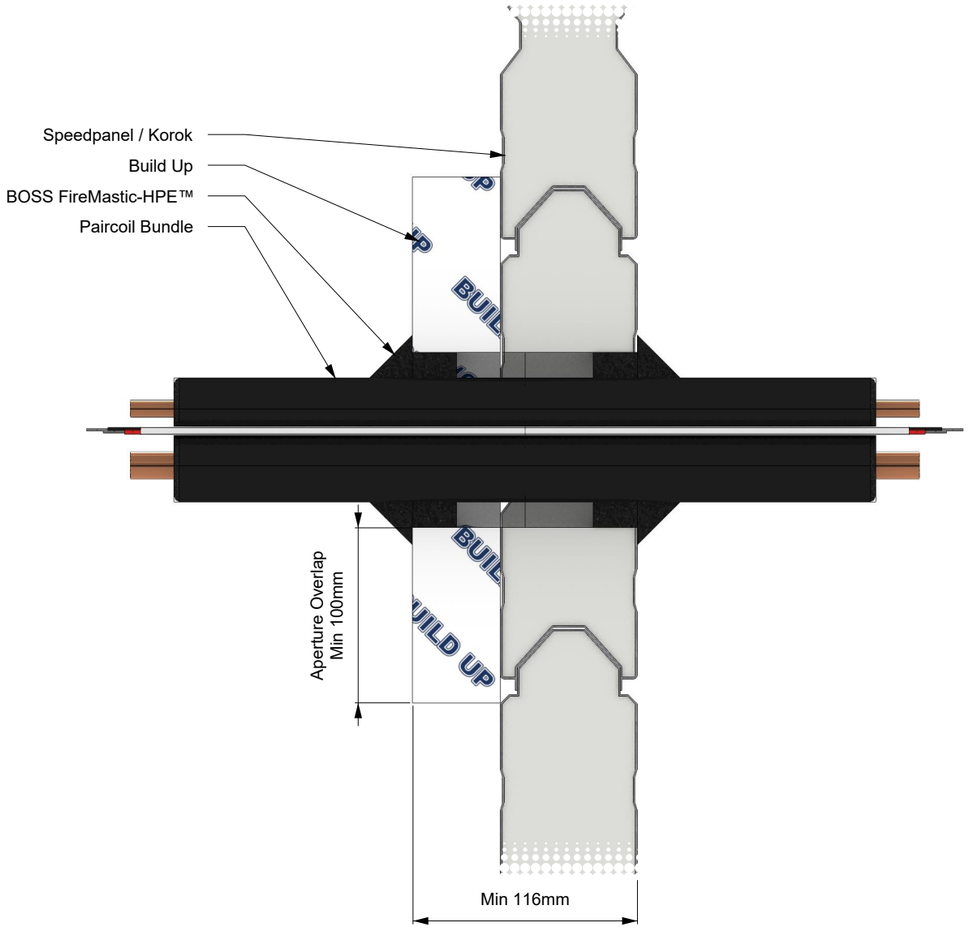

BUILD UP DETAILS

*Localised thickening to be fixed and sealed to substrate using appropriate methods relevant to the substrate and build up material.

*To achieve the necessary thickness and FRL rating of the originally tested substrate, the separating element can be built-up on one or both sides by using BOSS Batts, fire-rated plasterboard, calcium silicate board, or Shaftliner board.

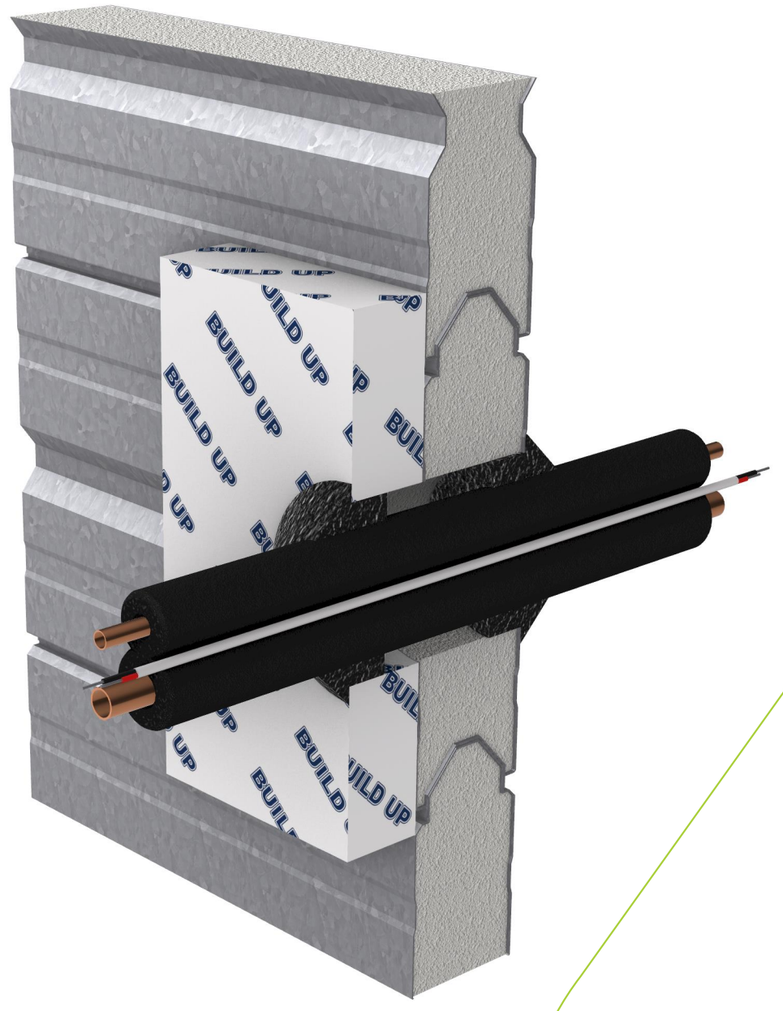

SYSTEM DESCRIPTION	
Orientation:	Wall
Trade / Type:	HVAC
Service:	-
Substrate:	Speedpanel / Korok with Buildup
Min Substrate Thickness (mm):	116
Sealant Depth (mm):	25
Sealant Fillet (mm):	25
Wrap Length (mm):	-
FRL / FRR:	-/120/120

FIRE STOPPING INFORMATION	
BOSS FireMastic-HPE™	-
-	-
-	-
APERTURE (mm)	**ANNULAR GAP (mm)**
100	-
ADDITIONAL INFORMATION	
-	

SERVICE SIZE & DETAILS

- Paircoil - Up to 10 mm/16 mm Insulated Copper Pipes insulated with 13 mm thick rubber foam.
- Up to 1.5 mm² 2 Core Data Cable.
Sealant to a depth of 25 mm in annular gap with 25 mm x 25 mm fillet on both sides. Sealant backed with foam backing rod.

SUPPORTING INFORMATION			
Reference Standard:	AS 1530.4:2014		
Supplementary Standard:	AS 4072.1-2005		
Report Reference:	WF FAS 190335		
Drawing Number:	BF-2201.16		
Date:	20/01/25	**Rev:**	01

IMPORTANT: This drawing is provided as a guide only and does not guarentee compliance for every application. Confirm that the supporting certification is applicable to your specific construction details and obtain acceptance from the relevant Certifying Authority before installation. BOSS Passive Fire reserves the right to amend this document without notice.