BOSS BF-2380-4

AU: 1300 502 677 | NZ: 0800 502 677 www.bossfire.com

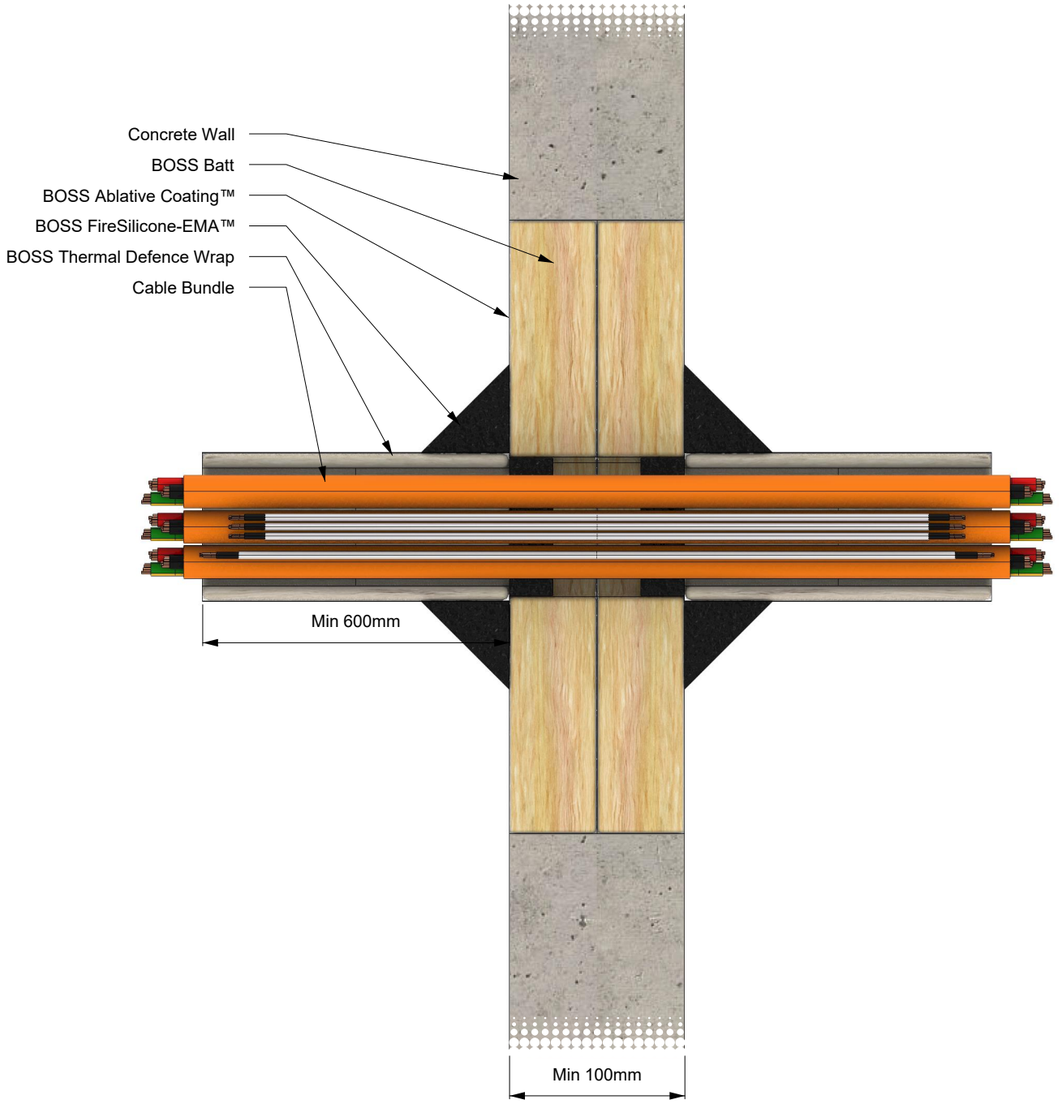

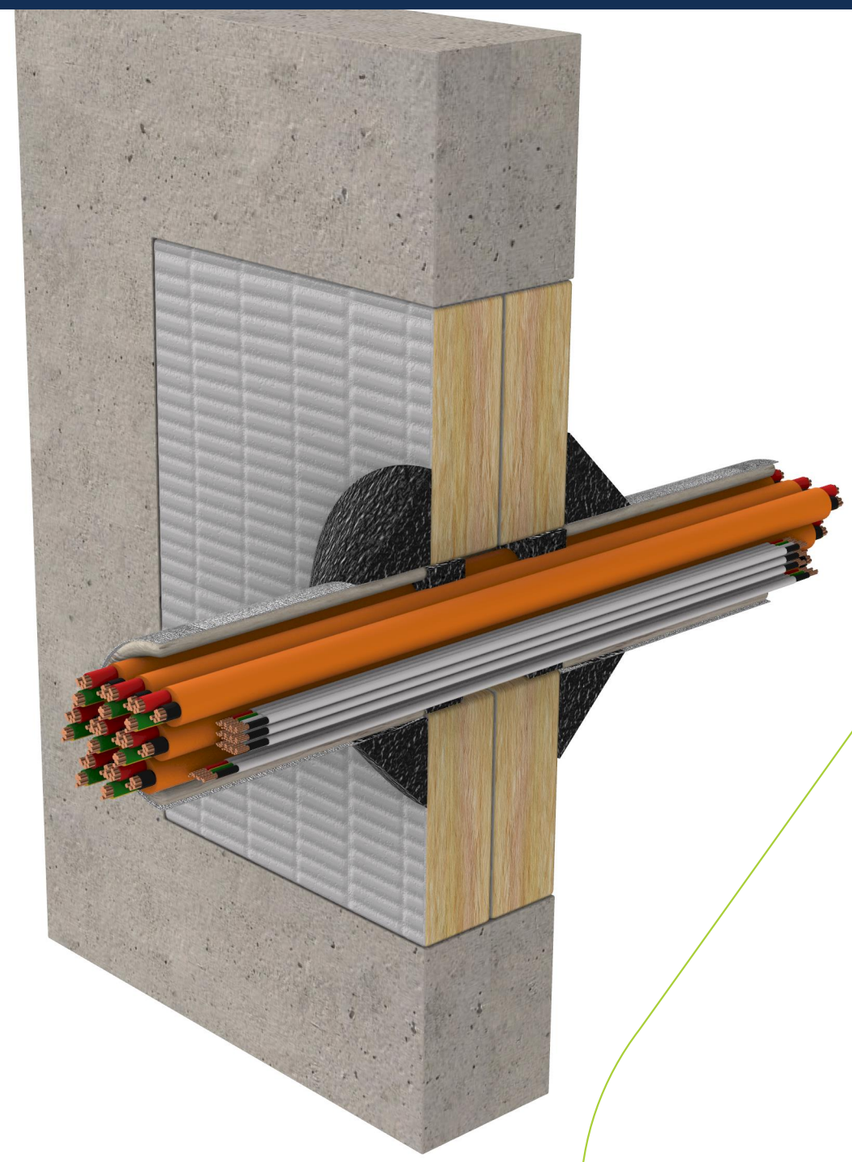

SYSTEM DESCRIPTION	
Orientation:	Wall
Trade / Type:	Electrical
Service:	Multi Core / Orange Circular / Mains
Substrate:	Concrete wall
Min Substrate Thickness (mm):	100
Sealant Depth (mm):	25
Sealant Fillet (mm):	50
Wrap Length (mm):	600
FRL / FRR:	-/90/90

FIRE STOPPING INFORMATION	
BOSS Batt™	BOSS Thermal Defence
BOSS Ablative Coating™	-
BOSS FireSilicone-EMA™	-
APERTURE (mm)	**ANNULAR GAP (mm)**
Up to 1100 x 1100	Up to 20
ADDITIONAL INFORMATION	
-	

SERVICE SIZE & DETAILS

Cable bundle
-Up to 2.5mm² 2C+E Power Cable
-Up to 3 x 6mm² 3C+E Power Cables
-Up to 8 x 16mm² 3C+E Power Cables
FireSilicone-EMA™ Sealant installed 25mm deep in annular gap up to 20mm wide, finished with a 50 mm x 50 mm fillet both sides. 600mm of Thermal Defence Wrap each side of the wall.

SUPPORTING INFORMATION			
Reference Standard:	AS 1530.4:2014		
Supplementary Standard:	AS 4072.1-2005		
Report Reference:	WF FAS 200332		
Drawing Number:	BF-2380.4		
Date:	10/04/25	**Rev:**	01

IMPORTANT: This drawing is provided as a guide only and does not guarentee compliance for every application. Confirm that the supporting certification is applicable to your specific construction details and obtain acceptance from the relevant Certifying Authority before installation. BOSS Passive Fire reserves the right to amend this document without notice.